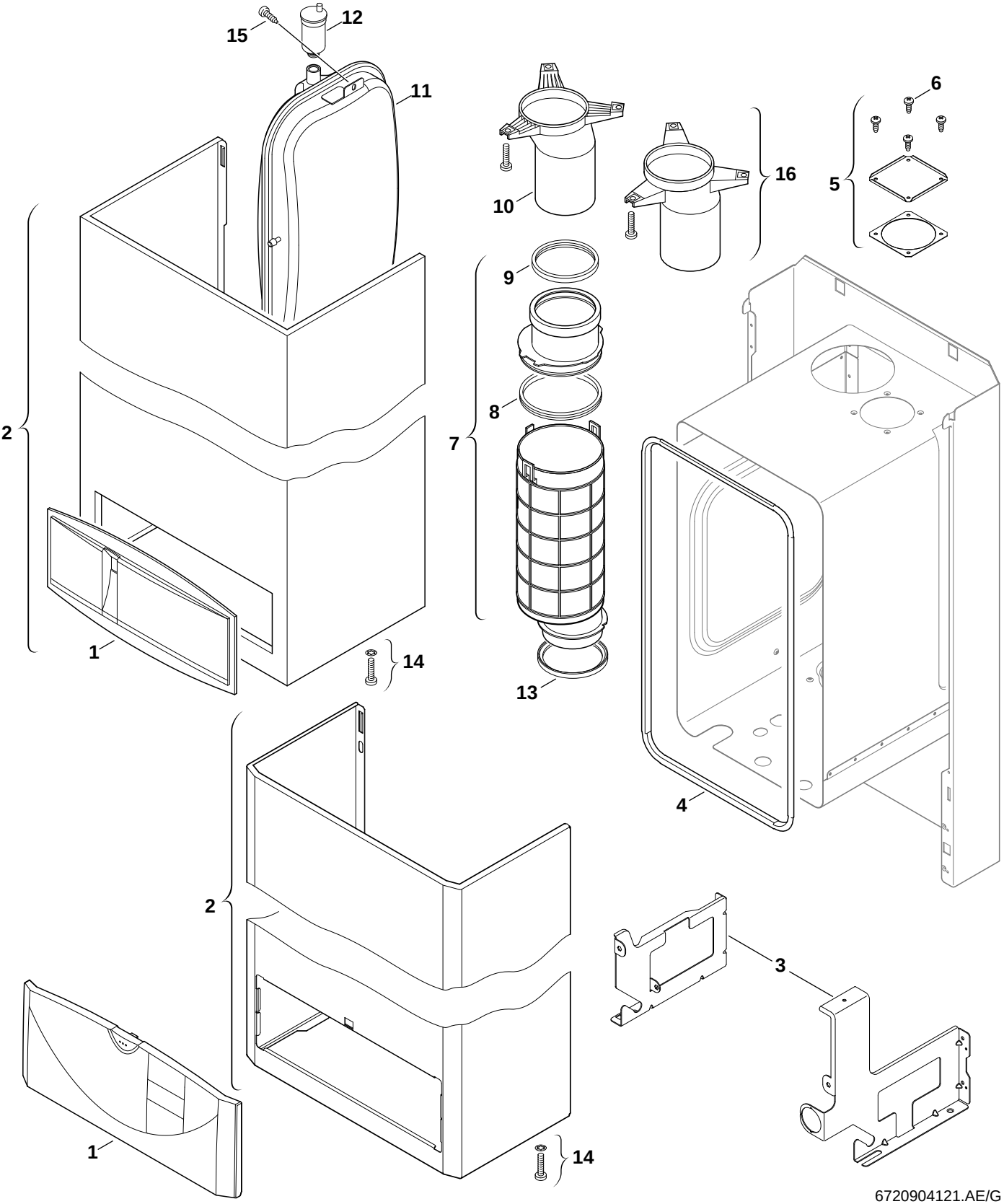

6720904121.AE/G