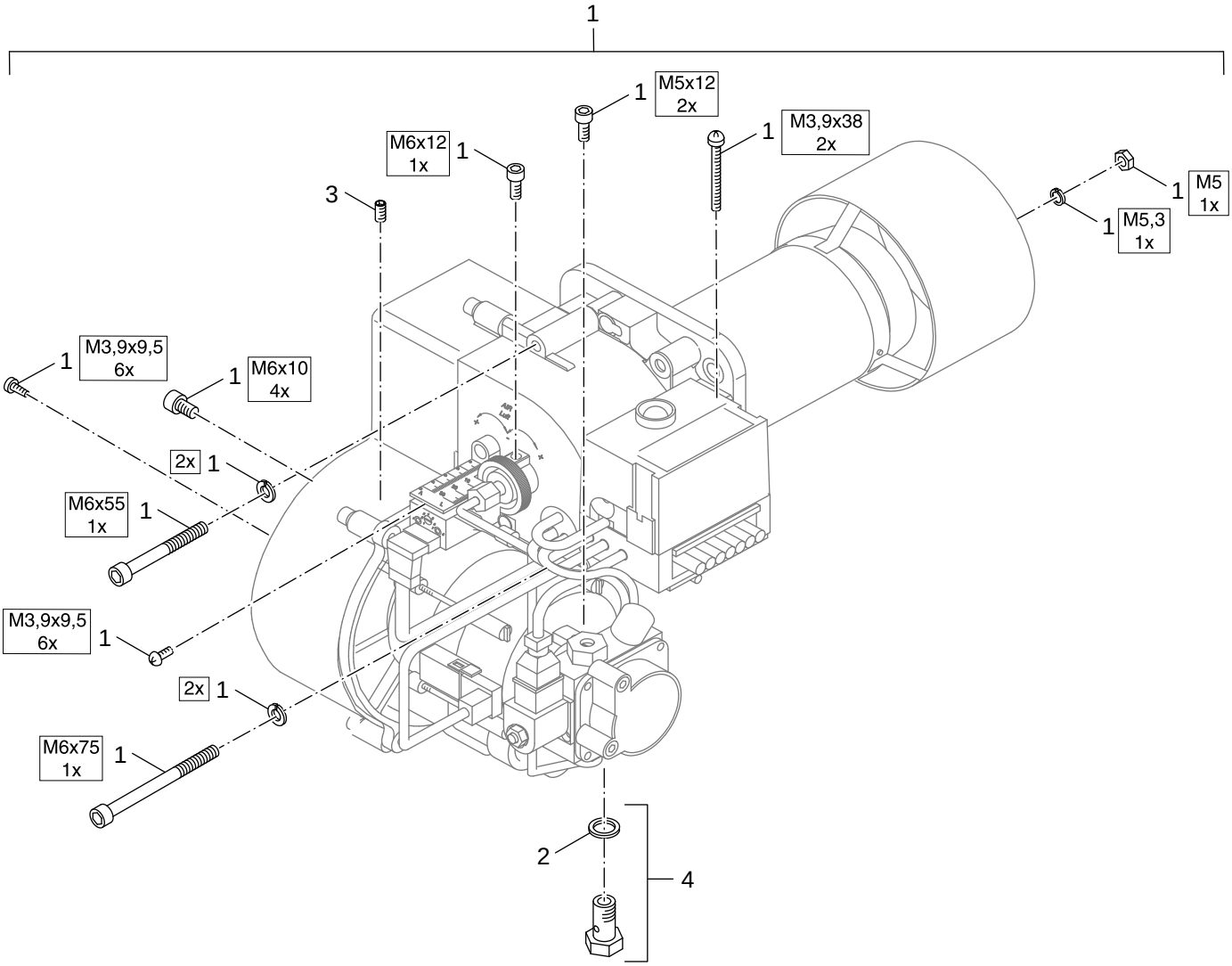
1
1
M5x12
2x
1
M3,9x38
2x
M6x12
1x
1
3
1
M5
1x
1
M5,3
1x
1
M3,9x9,5
6x
1
M6x10
4x
2x
1
M6x55
1x
1
M3,9x9,5
6x
1
2x
1
M6x75
1x
1
2
4