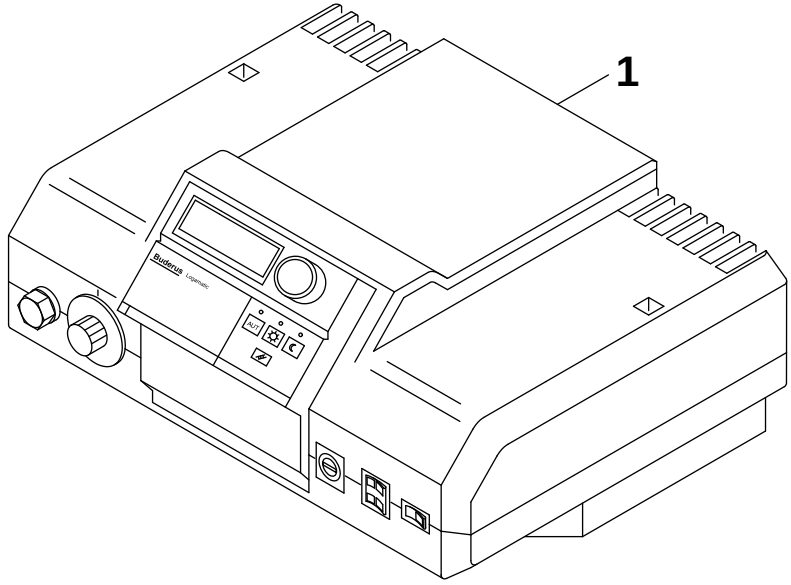

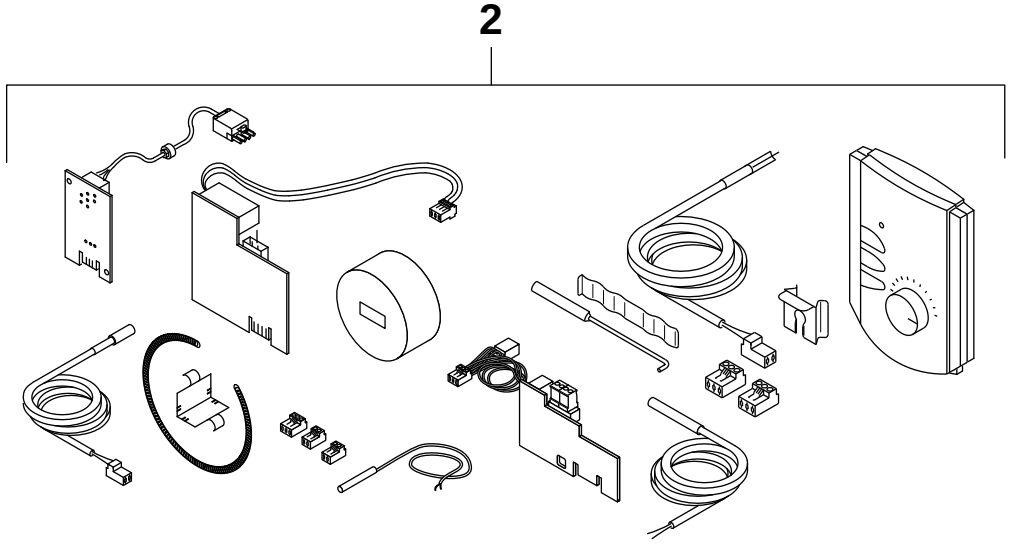

6720906924.aa.RS