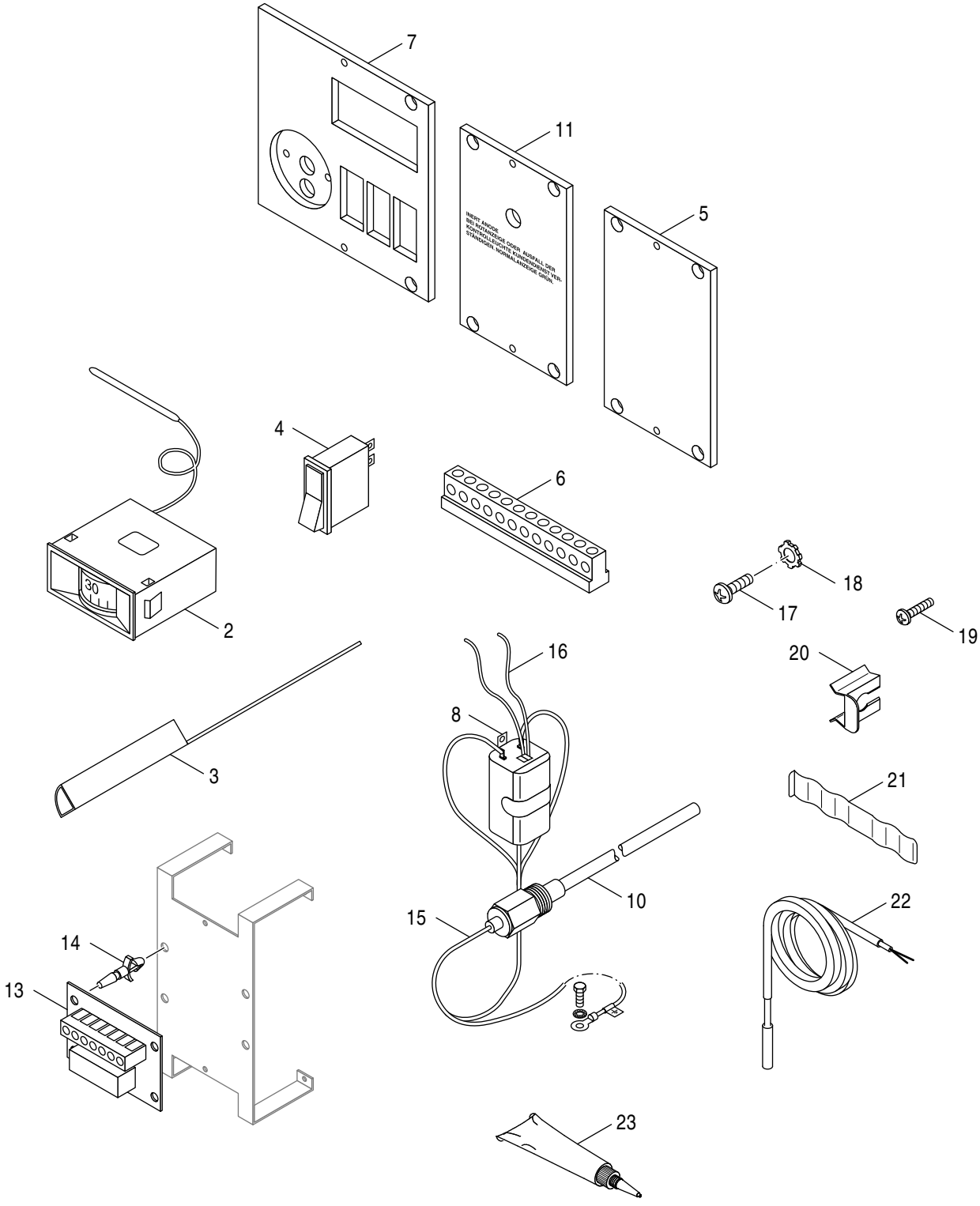

8738893242.aa.RO